NO: 13040503.0054.01

DCM3366D-X-W1

Instruction for DCM3366D-X-W1 Electronic DC Energy Meter

DCM3366D Â

Ć RS485 Ł Â

Â

DCM3366D DC energy meter is a new type product of our company which adopts LCD display and RS485 communication with the microcomputer. It is suitable to be used for batteries, solar panels power DC signal measurement and energy

metering equipment. It also can be used for industrial and mining enterprises, civil construction, building automation and other modern DC system for distribution.

ч -25 ~+60

Ь 85 ˆ 25 ˜ ғ Ь ’ ȁ

Â

This meter should be fixed in the inside or outside to use, and the environmental temperature to apply in is -25 ~+60 , relative humidity is not more than 85 (temperature is 25). It should not contain corrosive gas in the air. Avoid the impact of the salt spray, high electromagnetic radiation and condensation etc.

DCM3366D ᵃᵒ Ъ -ᵢᵢ ᵃᵒ ˇ ط Ъ

Â

DCM3366D series provides many different types of products which can meet domestic and international market specific requirements.

Ь ˇ Й ˛ ˛

Â Positive/ reverse power can be measured separately.

1 1~4 № ȁ ˇ Â

Measuring 1-loop DC voltage in real time,measuring DC current power of 4branches circuit .

⁘ ⁘ 12 ÂMonthly statement of energy for last 12months of

each branches.

à ä´ à Â

Load recording, can be settable from voltage, current, power and energy.

ч 1 № Й

Ь 40 Â

Storage space of load recording: the data capacity is not less than 40 days at interval of 1 minute when recording positive energy.

RS-485 DL/T645-2007 Modbusˆ RTU ˜

Â

RS-485 communication port, complying with DL/T645-2007 and Modbus-RTU communication protocol.

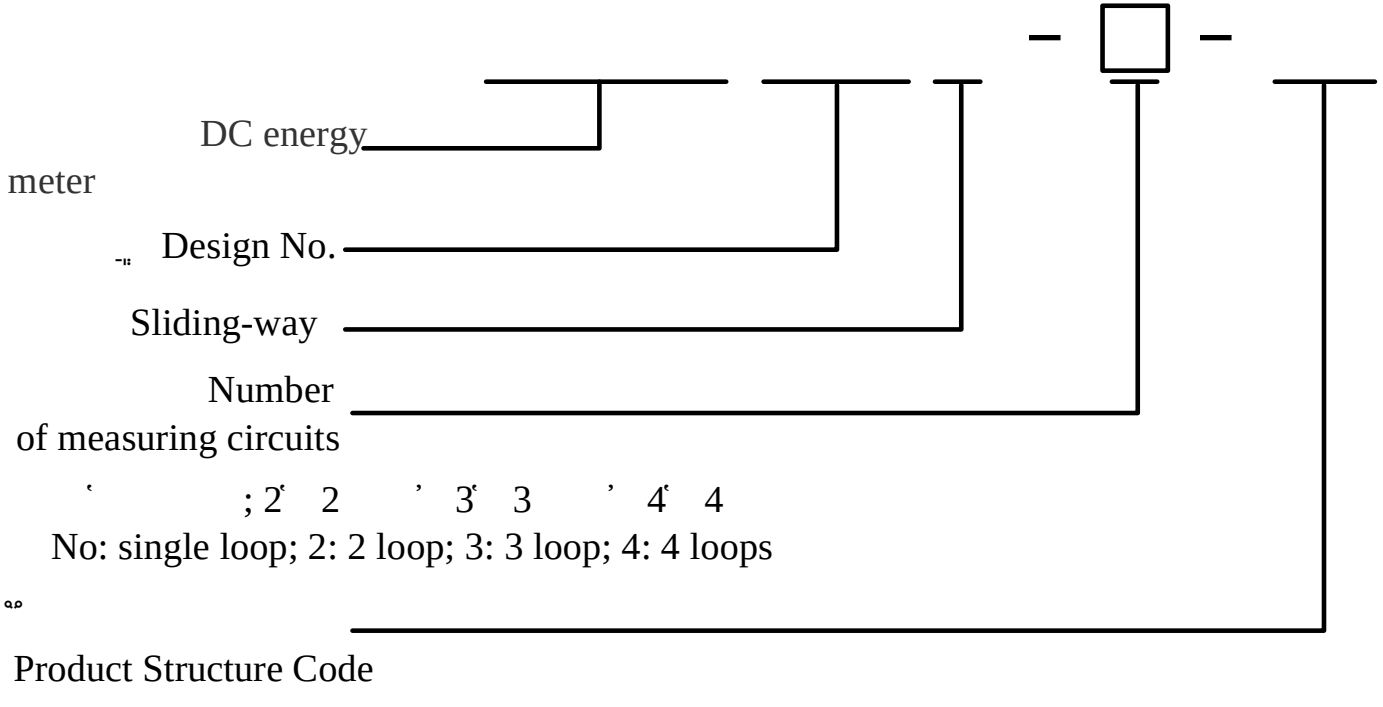
DC energy
meter
Design No.
Sliding-way
Number
of measuring circuits
No: single loop; 2: 2 loop; 3: 3 loop; 4: 4 loops
Product Structure Code

2.1 Specification

Accuracy class˙ 0.5 class à 1 class à 2 class

(Un)˙ 24V à 48V à 100V à 350V à 500V à 700V

500V № ч 100V Â

Rated voltage(Un): 24V à48V à100V à350V à500V à700V, The rated voltage is greater than the 500V required for the measurement of the Less than 100V

by the voltage divider.

(Ib)‘ 50A à 100A à 200A DC0~4V 0~20mA

Â

Rated current(Ib): 50A à 100A à 200A etc. can be set,Use DC0~4Vor 0~20mA sensor input.

‘ DC20V~60V à AC85V~265V or DC85V~330V

The range of power supply: DC20V~60V à AC85V~265V or DC85V~330V optional

2.2 Technical parameters

2.2.1 The basic error

2.2.2 Operating voltage range

Specified operating voltage	0.8Un~1.1Un
Extended operating voltage	0.6Un~1.1Un

2.2.3 Creeping

Й № 1.1Un 0.8Un

20min Ь Ŧ Ŧ Â

Output voltage deviation is less than 5%ˆ only when the load), balance of positive and negative output power up to 2W.

2.2.5˝ Power Consumption

voltage line	≤1W
current line	≤0.5W
ˆ power supply line	≤5W

2.2.7 Communication port

RS485 1200/2400/4800/9600bps T

2400

Communicationbaudrate RS485

2.2.8 EMC

Insulation strength	/ / voltage / Power / Frame 2.0kV/min / communication/power supply 2.0kV/min
VESD	Contact discharge8 kV Air discharge8 kV
Fast pulse group immunity	2kV
Surge immunity	2kV/4kV

2.2.9 Parameters

Dimension： 72±0.5mm×76.5±0.5mm×63.5±0.5mm

Weight： about0.5kg

3.1 Ь Display and button operating

Ь à4 LED ’ “▲” à“▼” à

“ ” Â

“▲” à “▼” à à à à à´

℗ Â

Display interface is composed of display screen, three buttons, four LED lights,“▲”,“▼”,“ ”button.

Press “▲” à “▼”can cycle display date, time, energy, voltage, current and power.

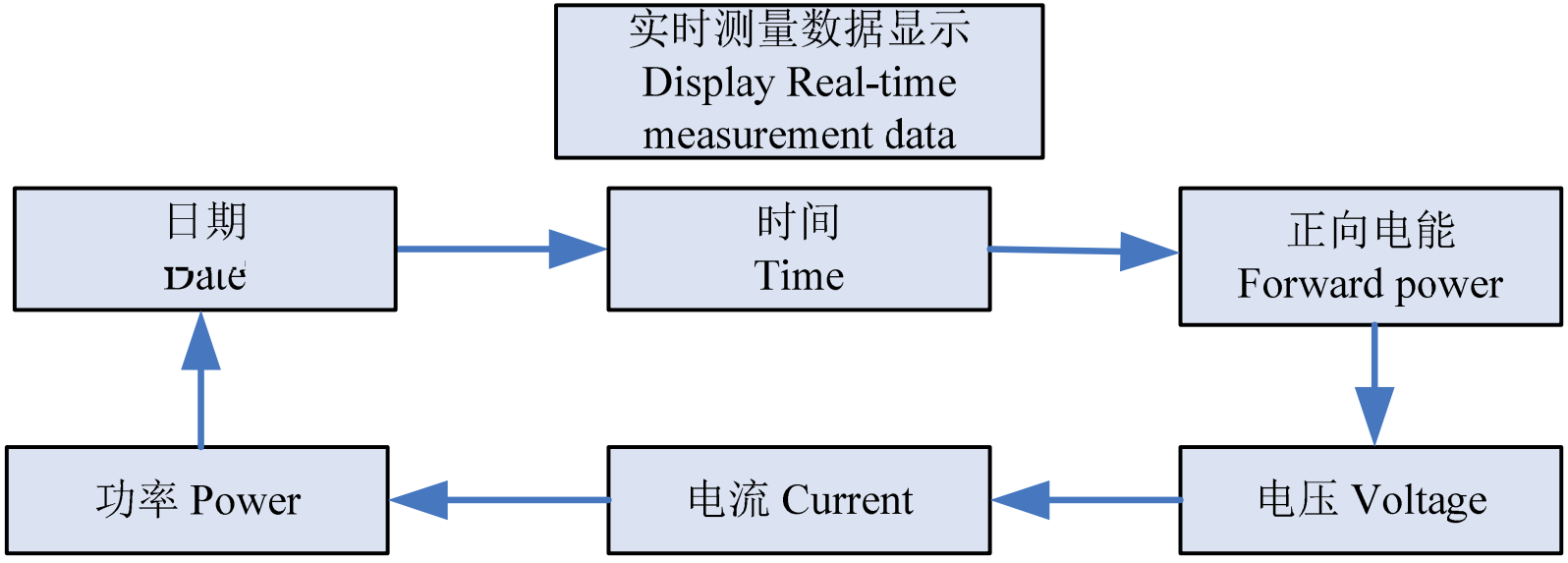
实时测量数据显示
Display Real-time
measurement data
日期
Date
时间
Time
正向电能
Forward power
功率 Power
电流 Current
电压 Voltage

l’ SET L Press “SET”to enter setting interface

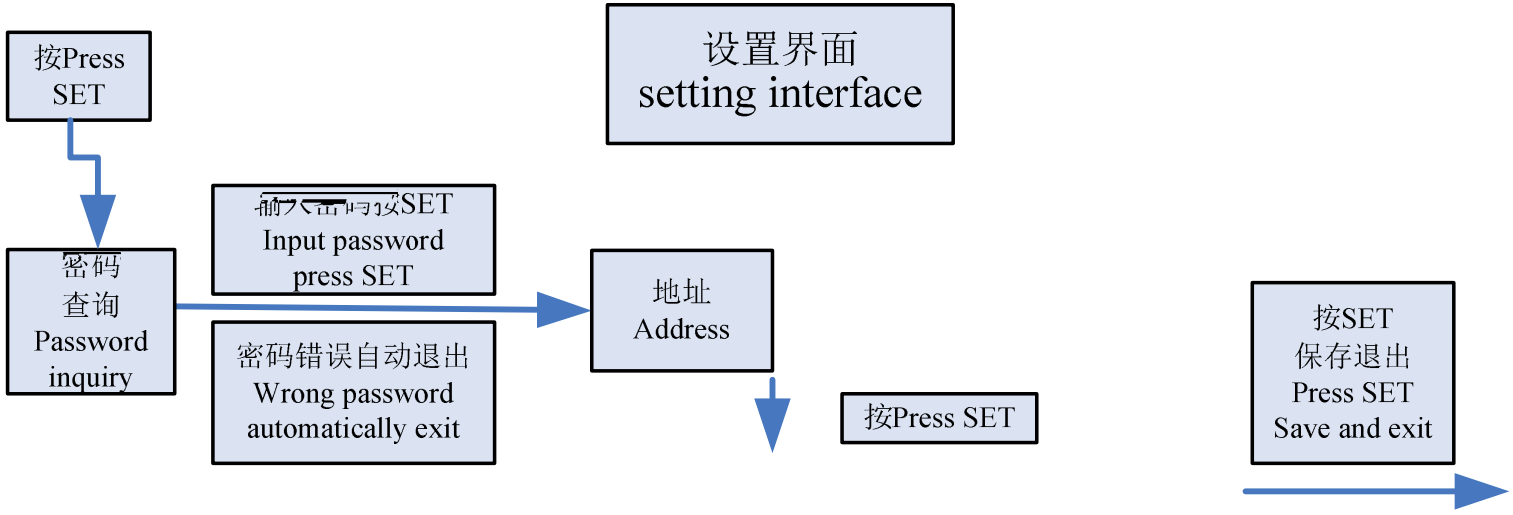

其中输入密码，修改地址、表号、波特率，通过“▲”选择数值，“▼”进行移位
Entering a password, modify the address, table number,

Þ Â Buttons cannot wake up the LCD display when the meter powered off

‘ ’ Â

Pulse indicating Energy pulse indicating, red, flickers when the forward power energy is consumed otherwise out.

3.2 Characters introductions

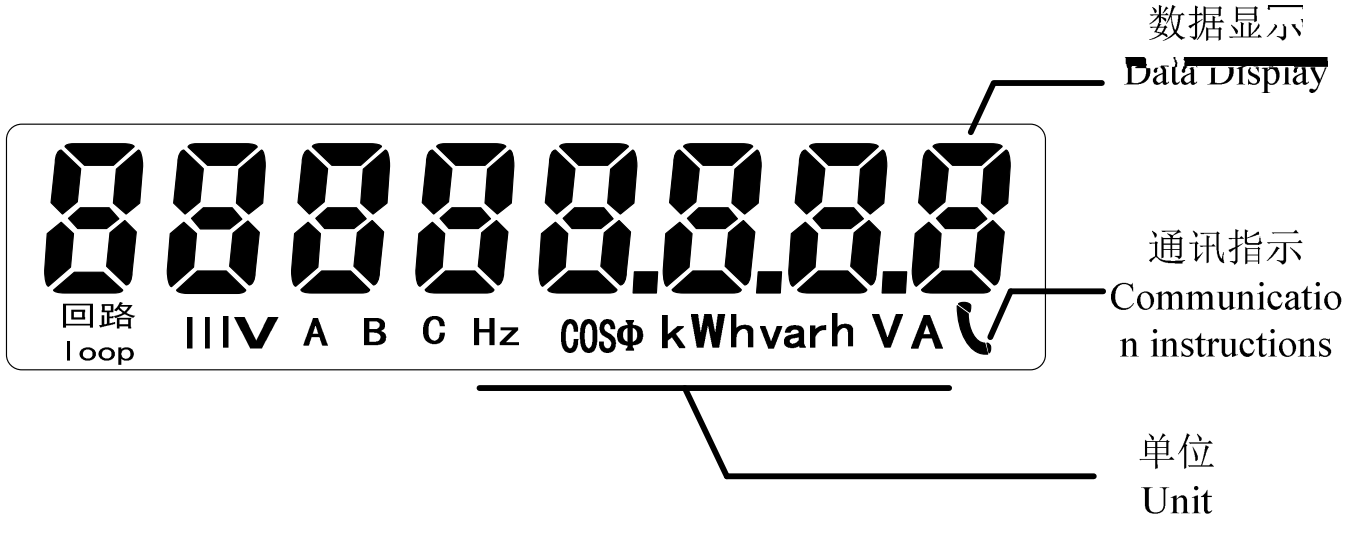

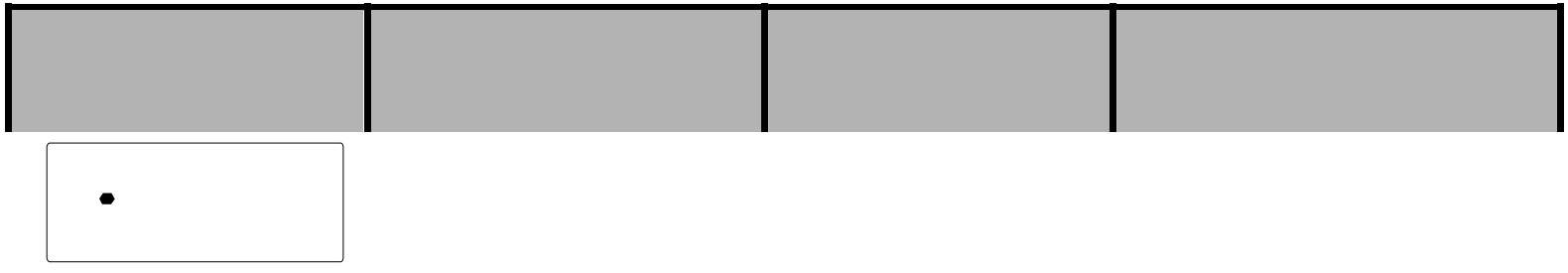

4.1 External Dimension (β Units: mm Tolerance: ± 0.5)



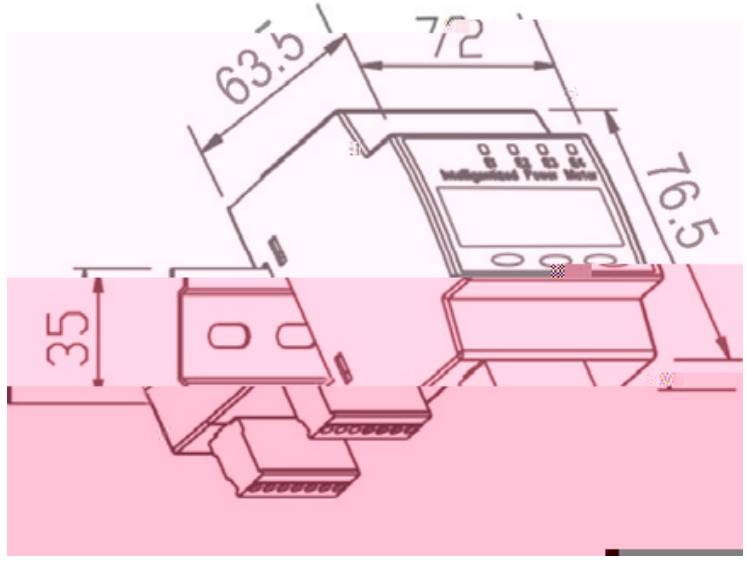

4.2 ĩ Wiring diagram

Terminal definition

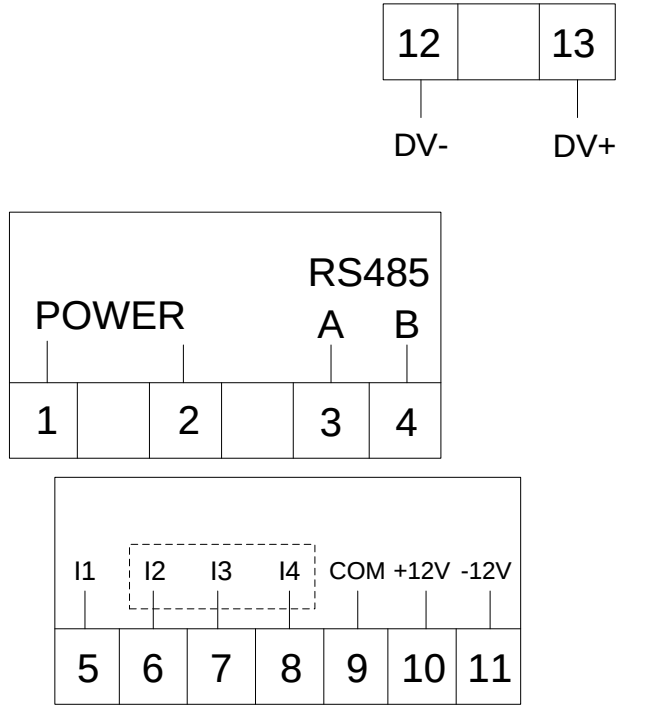

Terminal instruction

1,2	POWER	ˆ power supplyˆ Ь № regardless positive and negative˜
3,4	A,B	RS485

Wiring diagram

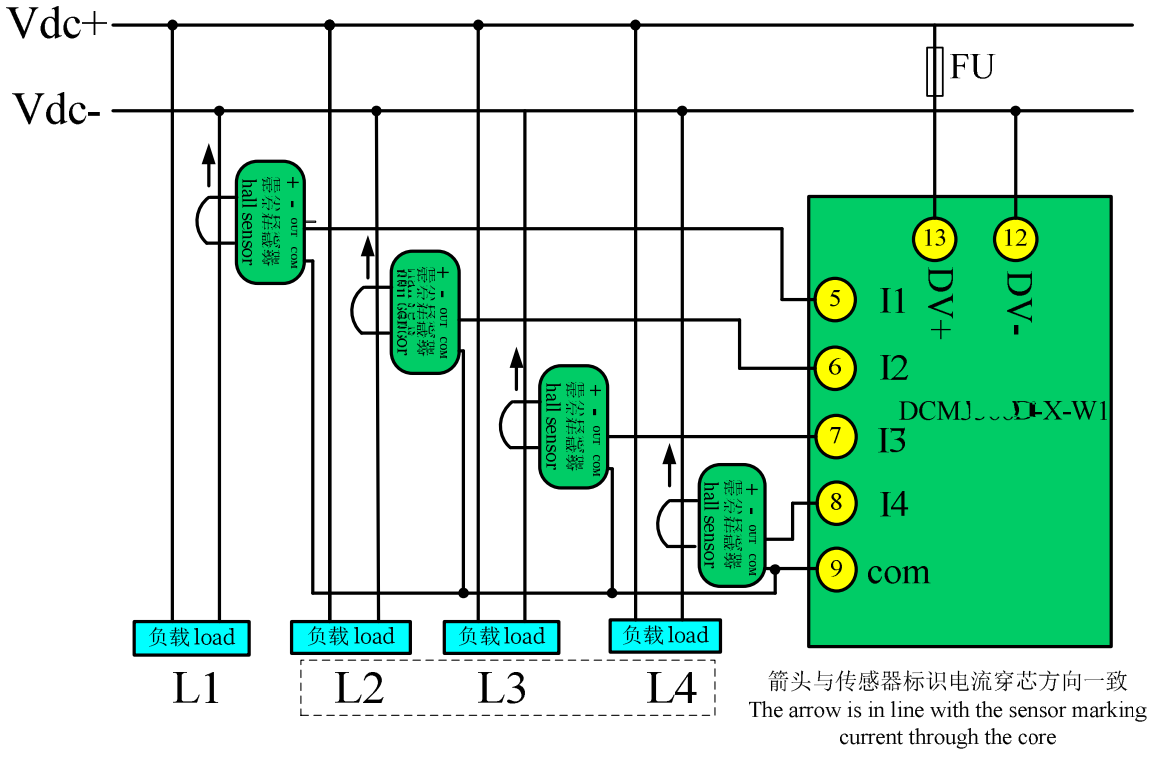

DC negative system connection

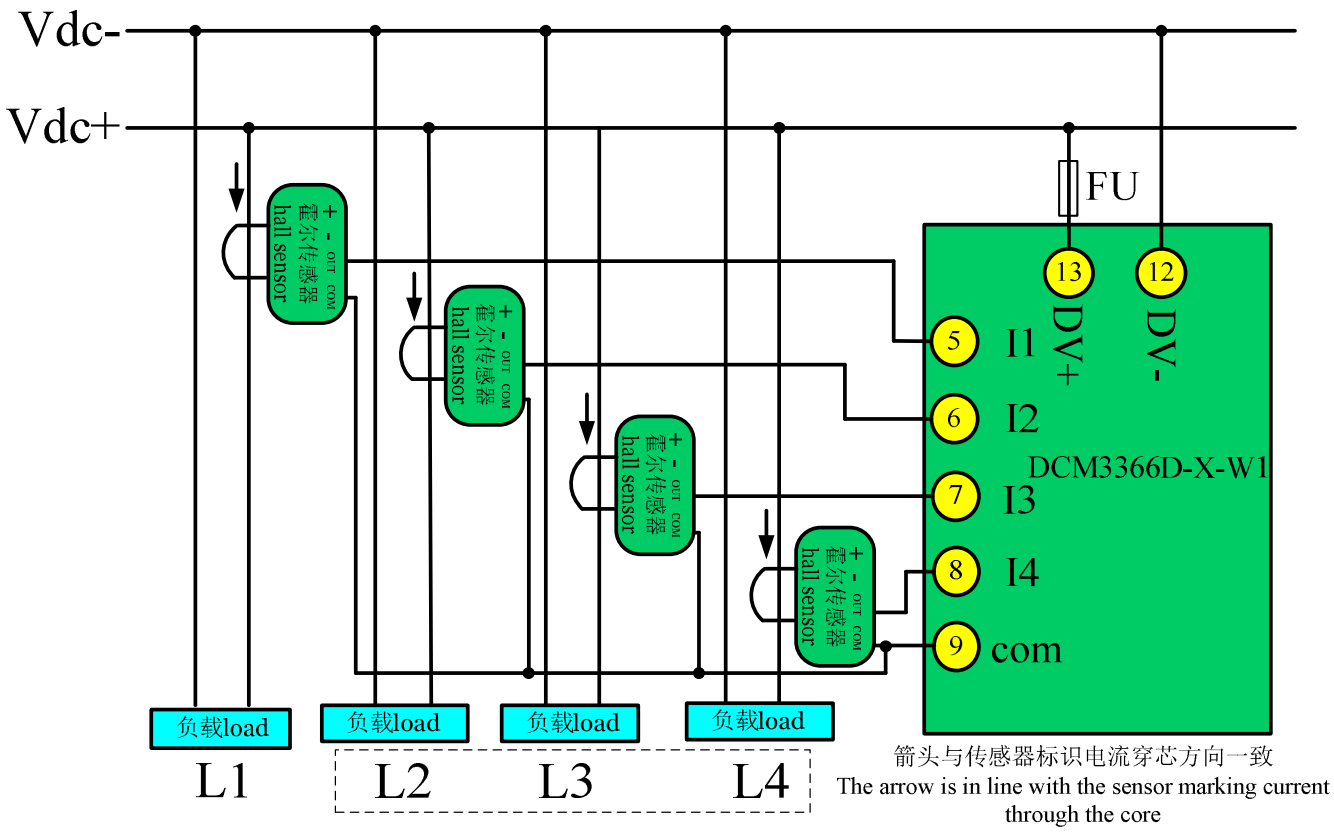

DC positive system connection

5.1 ᵐ ƀ ƀ 0 Ɗρ ط GB/T13384-2008ê

ᵐ Ì Â

The products should not be subject to server impact during transportation or taking down the seal, and should follow GB/T13384-2008"General Instrument packaging technology," to transport and store.

5.2 ᵐ à Ŋ Ɗρ Â

This product belongs to the electronic device, should be avoided heavy impact and collision.

5.3 ч -40~70 ƀ 85% Â

Ŧ 18 Ь

Й

Â

Within 18 months after delivery if find any unconformity on the condition that users have followed the specified requirements of instructions and the sealed mark remains in good condition (or The Power Metering Sector provides relevant certificates), our company is in charge of free repair.

Guangdong Yada Electronics Co.,Ltd.

Address:Yada industry park, Gaopugang, Heyuan city,
Guangdong Province.
(Zip code)： 517000
(Website)： http://www.yada.com.cn
E-mail： market@yada.com.cn
(hot-line)： 400-830-0868
® Â Þ Â
Copyright, all rights reserved. Specification subject to change without prior notice