NO: 13040503.0072.01

Instruction for DCM3366D-X-W1

Electronic DC Energy Meter

Guangdong Yada Electronics Co.,Ltd

Content

1. General 1

2. Specification & Main technical parameters 2

2.1 Specification 2

2.2 Technical parameters 3

3. Display and operating 5

3.1 Display and button operating 5

3.2 Characters introductions 6

4. Dimension diagram and Wiring diagram 7

4.1 External Dimension 7

4.2 Wiring diagram 7

5. Transport storage 9

6. Warranty and service 9

1. General

DCM3366D DC energy meter is a new type product of our company which adopts LCD display and RS485 communication with the microcomputer. It is suitable to be used for batteries, solar panels power DC signal measurem

Type definition:

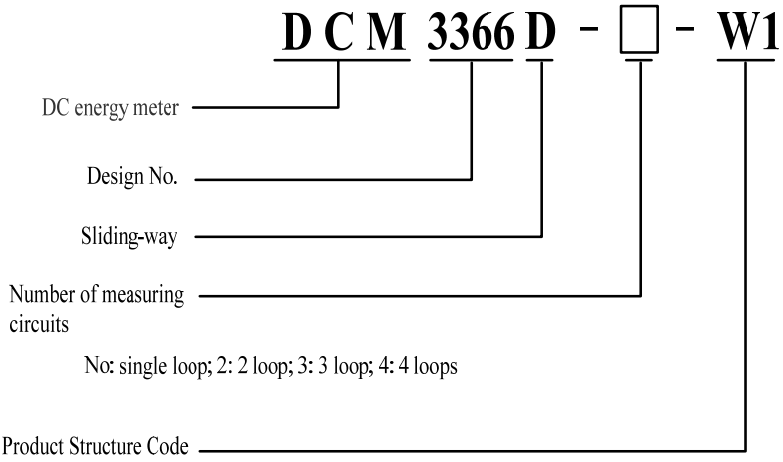

2. Specification & Main technical parameters (The following parameters are subject to the nameplate)

2.1 Specification

Accuracy class: 0.5class, 1 class, 2 class

Rated voltage(Un): 24V 48V 100V 350V 500V 700V, The rated voltage is greater than the 500V required for the measurement of the Less than 100V by the voltage divider.

Rated current(Ib): 50A 100A 200A etc. can be set,Use DC0~4Vor 0~20mA sensor input.

The range of power supply: DC20V~60V AC85V~265V or DC85V~330V optional.

2.2 Technical parameters

2.2.1 The basic error

Under the rated voltage(Un), the basic error of meter error limit should not exceed the table.

Load current (I) variation range	Error limit	
	0.5 class	1 class
0.05Ib≤I<0.5Ib	±1.0%	±1.5%
0.5Ib≤I≤1.2Ib	±0.5%	±1.0%

2.2.2 Operating voltage range

Specified operating voltage	0.8Un~1.1Un
Extended operating voltage	0.6Un~1.1Un

2.2.3 Creeping

Short-circuit current meter under the reference conditions,Voltage circuit are applied 1.1Un and 0.8Un, in 20min time meter should not have a pulse output or pulse output representative of light no flicker.

2.2.4 Power output

Meter with DC ± 12V power output,provide power supply for dedicated sensor.

Output voltage deviation is less than 5% only when the load), balance of positive and negative output power up to 2W.

2.2.5 Power Consumption

2.2.6 Working conditions

Working temperature range	-25 ~60
Limit working temperature range	-40 ~70
Storage and transport limit temperature	-40 ~70
Relative humidity	75% The annual average

2.2.7 Communication port

Communicationbaudrate	RS485: 1200/2400/4800/9600bps optional The default baud is 2400
data format	E-8-1
Communication protocol	DL/T645-2007 Communication protocol Modbus-RTU

2.2.8 EMC

Insulation strength	voltage / Power / Frame: 2.0kV/min communication/power supply: 2.0kV/min
VESD	Contact discharge8 kV Air discharge8 kV
Fast pulse group immunity	2kV
Surge immunity	2kV/4kV

2.2.9 Parameters

Dimension: 72±0.5mm×76±0.5mm×63±0.5mm

Weight: about0.5kg

3. Display and operating

3.1 Display and button operating

Display interface is composed of display screen, three buttons, four LED lights,“▲”,“▼”,“**SET**”button.

Press “▲” “▼”can cycle display date, time, energy, voltage, current and power.

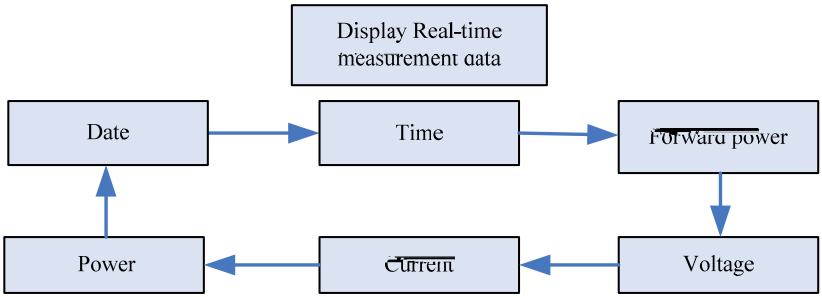

Press “SET”to enter setting interface

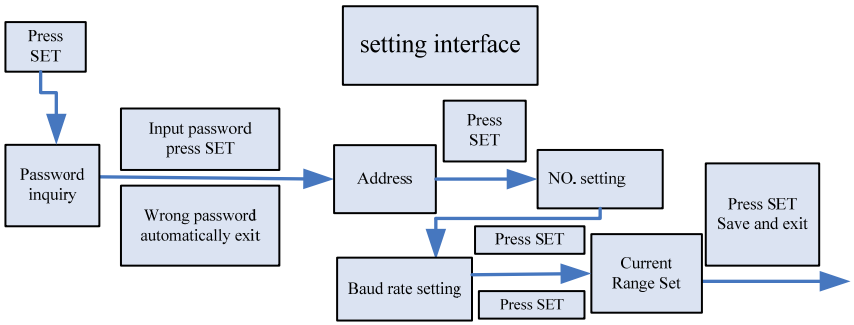

Entering a password, modify the address, table number, baud rate, by "▲" select value, "▼" shift

Buttons cannot wake up the LCD display when the meter powered off.

Pulse indicating Energy pulse indicating, red, flickers when the forward power energy is consumed otherwise out.

3.2 Characters introductions

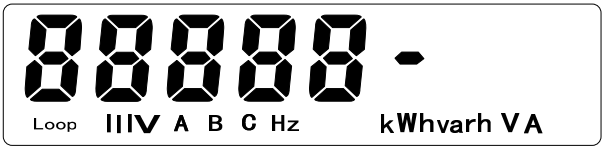

4. Dimension diagram and Wiring diagram

4.1 External Dimension (Units mm, Tolerance ± 0.5)



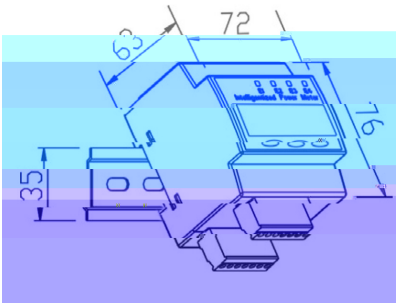

4.2 Wiring diagram

Terminal definition

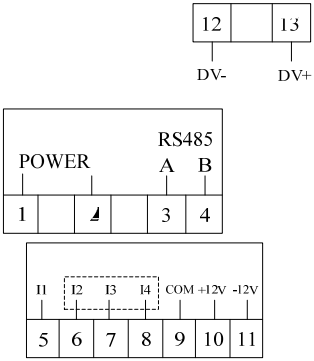

Terminal instruction

1,2	POWER	power supply regardless positive and negative
3,4	A,B	RS485 communication
5~8	I1~I4(Voptional)	Current sensor output is positive
9	COM	The common port of sensor input and voltage output
10,11	±12V	DC±12V output
12	DV-	Sampling voltag (-)
13	DV+	Sampling voltag (+)

Wiring diagram

Vdc+

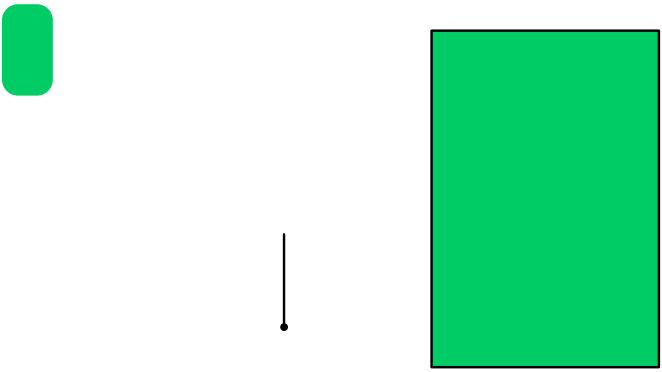

5. Transport storage

5.1 The products should not be subject to server impact during transportation or taking down the seal, and should follow GB/T13384-2008"General Instrument packaging technology," to transport and store.

5.2 This product belongs to the electronic device, should be avoided heavy impact and collision.

5.3 The ambient temperature should be -40~70 for storage, the relative humidity should be no more than 85%.

5.4 The meter should lay under the conditions of the package, a high degree of no more than 5 stacked layers. If find the appearance of damage when unpacking, the meter should not be installed or power-on. Meter should not be stored after the package is taken down. The height of single meter stacked not more than 5 pieces.

6. Warranty and service

Within 18 months after delivery if find any unconformity on the condition that users have followed the specified requirements of instructions and the sealed mark remains in good condition (or The Power Metering Sector provides relevant certificates), our company is in charge of free repair.

Note: The above pictures are for reference only, the products are subject to the actual product.



Guangdong Yada Electronics Co.,Ltd.
Address:Yada industry park, Gaopugang, Heyuan city, Guangdong Province.
Zip code: 517000
Website: http://www.yada.com.cn
E-mail: market@yada.com.cn
hot-line: 400-830-0868

Copyright, all rights reserved. Specification subject to change without prior notice.