NO: 13040901.0241.00

YD2037Y-G

YD2037Y-G Series of multi - functional smart power meter specification

Guangdong Yada Electronics Co.,Ltd.

Contents

Chapter Ň Introduction 1

1.1 General 1

1.2 Function 1

1.3 Model Description 5

Chapter ň Installation 6

2.1 Installation prevention, preparation 6

2.2 Installation Information 6

2.2.1 Installation environment and location 6

2.2.2 Install.1(a)-5.6(t)8.1(i)8.1(on envi)8.1(r)6.5(nvi)8.1(r)6.5(nvi)8.1(r)6.5(nvi)8.1(r)6.5(nvi)8.1(r)6.5(nvi)8.1(r)6.5(nvi)8.1(r)6

Chapter V maintenance and troubleshooting 23

5.1 Troubleshooting 23

Chapter VI Quality Assurance 24

6.1 Quality Assurance 24

6.2 The quality of limit 24

Chapter Ň Introduction

1.1 General

YD2037Y-G ä ä LCD ä ˇ ¬ ä

ä ˅ ä ä Â

YD2037Y-G Series Smart meter is measurement, monitoring, LCD display and digital communication. It can be widely used in intelligent buildings, power systems, low-voltage power distribution, industrial automation, energy management systems and automation and other fields.

timetable. The maximum number of time zones is 14; the minimum interval is 15 minutes, and should be greater than the demand cycle set in the energy meter; the time period can be crossed. Zero setting.

Note: All kinds of historical data and set parameters are permanently saved. The storage of hist

Chapter ň Installation

2.1 Installation prevention, preparation

Please read before starting the installation

ä ˙ Â Й Â

2.2.2 Installation dimensions

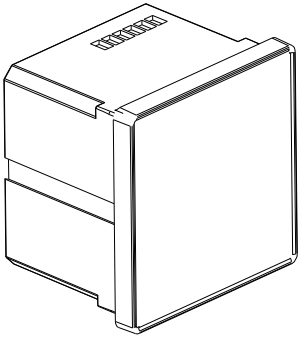

2.3 Terminal definition

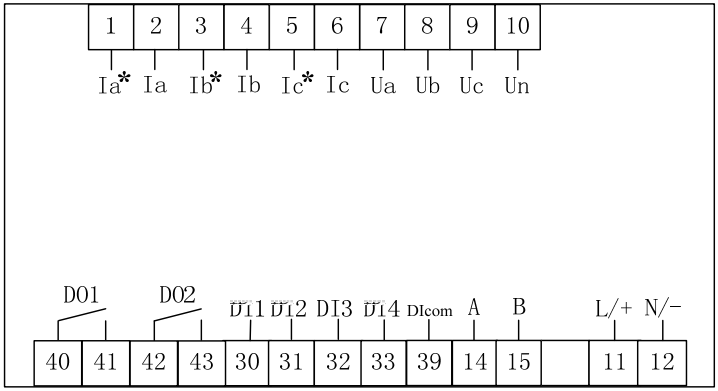

Terminal NO.	Terminal definition	Remark	Terminal NO.	Terminal definition	Remark
1	Ia*	A A Phase current input	40 ã 41	DO1	Ŧ The 1st relay output
2	Ia	A Ŧ A Phase current output	42 ã 43	DO2	ʜ Ŧ The 2nd relay output
3	Ib*	B B Phase current input	30	DI1	The 1st digital input
4	Ib9 ref288 322.216 ETq288 357.916 -36 -11 ETI				-128(9 refQre370.8 321.07 3576 mW* n0 595.0 420 -595.02 reW n.844 g

2.4 Wiring drawing



1) PT ҺЬ ’

The secondary measurement of PT cannot short-circuit;

2) CT ҺЬ CT CT ҺЬ ’

The secondary measurement of CT cannot be opened. When the CT and monitoring loop are disconnected, the secondary measurement of CT should be shortened;

3) ᷈ ᷈ ᷈ ’

The device is suitable for all kinds of three-phase systems. Please read this chapter carefully to choose the appropriate wiring mode;

4) ᷈ ’

The voltage to be applied should be within the rated voltage range of the device;

5) PT PT 25VA PTҺ ’

The PT must be protected by a circuit breaker or fuse. If the rated capacity of the PT used is greater than 25 VA, the PT secondary test shall also be equipped with a fuse;

6) PT CT PT CTҺ ᷈

Й PT ȁ CTҺ Â

The excitation of the PT and CT primary test will generate a large voltage and current in the PT and CT secondary test circuit, so necessary safety measures must be taken when installing the instrum3PT a9.8( )9.(and)8.7wdt725.0 78.0e5 0 .981c269c(PT)Tj381c269.ao796

ngeAC85V~265V, 50Hz/60Hz.

L/+ N/- ’ DC100V~330V ȁ DC20V~60V ᷊ Â

n used in DC systems, the positive ter minal is connected with L/+ terminal and the negative terminal is connected with N/- terminal.

pply ra 3ge is DC100V~330V, DC20V~60V,Optional.

2.4.2 Voltage and Current

1) wiring of three-phase four-wire

When the measuring line is a three-phase four-wire system, the wiring diagram is shown below, and the wiring mode of the device shall be set as "three-phase four-wire".

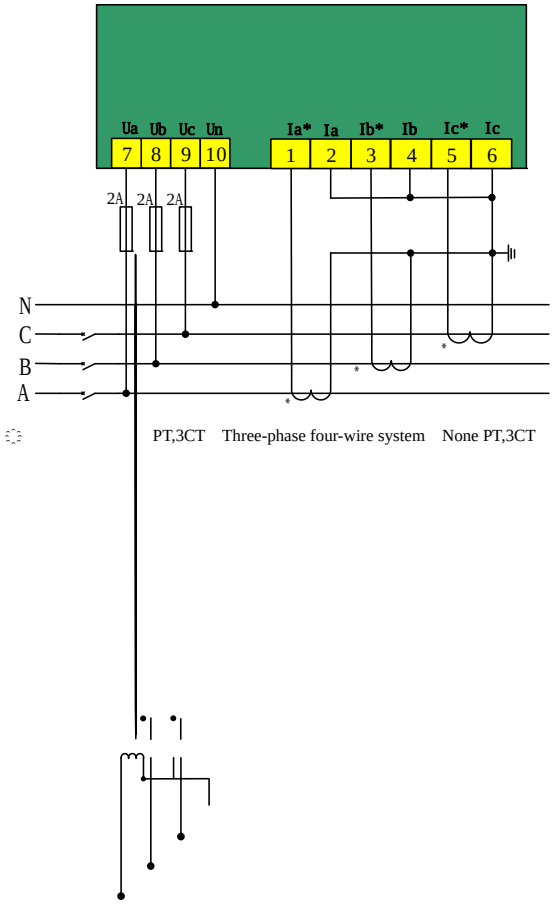

PT,3CT Three-phase four-wire system None PT,3CT

ŕ ┐ Â

The RS-485 communication mode allows up to 32 DCM series energy meters to be connected to one bus, and is connected to the host computer through an RS-485 converter.Communication cable can adopt ordinary screened twisted pair, and the total length shall be no more than 1200 meters,all RS-485 ports of positive and negative polarity must be connected correctly.If shielded twisted-pair cable is longer, Suggestions on its end by one of about 120 Ω resistance in order to improve the reliability of communication.

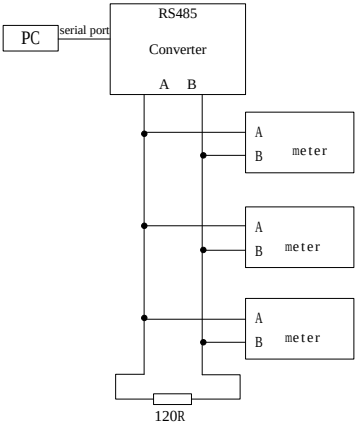

2.4.4

Â

The device is equipped with 2 electromagnetic relays, whose terminal Banks are labeled DO1 and DO2, which can directly cut off the load of 250VAC/5A or 30VDC/5A. When the load current is large, it is recommended to add intermediate relay.

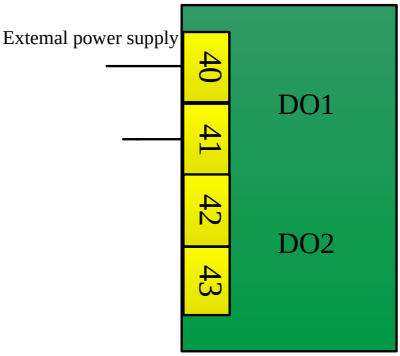

Chapter ’n Use and Operation

3.1 Keys definition

4 № Bs ,Up ,Dn ,St

There are four keys,they are Bs ,Up ,Dn ,St

Bs ‘ ‘ ß № Â

Bs ‘ Go back to the upper screen, when setting data: the data bit is shifted to the right, and the harmonic display screen enters the Fractals harmonic display interface.

Up ‘ ® ‘ Â

Up ‘ The screen switches up, when setting the data: the data plus one.

Dn ‘ Й ® ‘ Â

Dn ‘ The screen switches down. When setting the data: the data minus one.

St ‘ Й ‘ Â

St ‘ Go to the next screen,When setting the data:Modified data validation.

3.2 Display

3.2.1 Data screen Description

h 60S Â

The display interface is mainly composed of an LCD screen and four keys. The backlight display is highlighted with the keys on, while the backlight is automatically turned off when there is no operation 60S.

ط ß ‘ kW ã kvar ã kWh ã kvarh ã V ã A Â 2 ß ã 2 ß ã

3 ß ã 3 ß ã 2 ß Â

Simplified Chinese characters are adopted, and national legal units of measurement are adopted for data display, such as kW, kvar, kWh, kvarh, V, A, etc. Voltage 2 decimal, current 2 decimal, pow

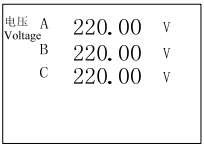	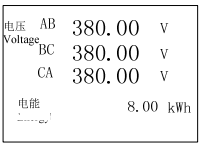	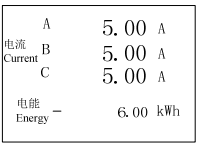
The screen of three phase phase-voltage	The screen of three phase line voltage and combined active energy	The screen of three phase current and reverse total active energy
The 1st line: Phase-voltage of A phase	The 1st line: AB phase line voltage	The 1st line: A Phase current
The 2nd line: Phase-voltage of B phase	The 2nd line: BC phase line voltage	The 2nd line: B Phase current
The 3rd line: Phase-voltage of C phase	The 3rd line: CA phase line voltage	The 3rd line: C Phase current
	The 4th line: Combined active energy (positive + reverse)	The 4th line: Reverse total active energy

ㄱ ㄱ Up ľ Ł Dn ľ Ł ℗ Â

When the data screen is operated without buttons by the customer, all the screens are displayed in wheel show, and manual switching can also be achieved by pressing Up key" " and Dn key" ".

№ The split-harmonic display picture

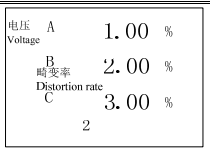	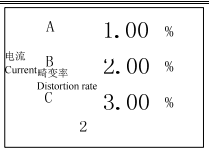	
№ 1 Voltage fractional harmonic distortion rate	№ 1 Current fractional harmonic distortion rate	
' A № 1 The 1st line: Voltage fractional harmonic distortion rate of A phase	' A № 1 The 1st line: Current fractional harmonic distortion of A-phase	
' B № 1 The 2nd line: Voltage fractional harmonic distortion rate of B phase	' B № 1 The 2nd line: Current fractional harmonic distortion of B-phase	
' C № 1 The 3rd line: Voltage fractional harmonic distortion rate of C phase	' C № 1 The 3rd line: Current fractional harmonic distortion of C-phase	
' № The 4th line: Sort number	' № The 4th line: Sort number	

3.2.2 ä ä DI ä DO Communication, alarm, DI, DO picture

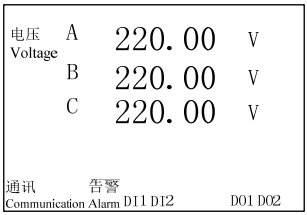

a ä Й ,

When the product communication is normal, the word communication will be displayed at the bottom left of the screen;

b ä Й ,

When the system generates any alarm, the word ľ Alarm Ł will be displayed at the bottom left of the screen;

c ä DI1 Й DI1 DI2 Й DI2 DI3 Й DI3 DI4 Й DI4 ,

When product switching quantity input DI1 is closed, DI1 will be displayed at the bottom of the display; when product switching quantity input DI2 is closed, DI2 will be displayed at the bottom of the display; when product switching quantity input DI3 is closed, DI3 will be displayed at the bottom of the display; when product switching quantity input DI4 is closed, DI4 will be displayed at the bottom of the display;

3.2.3.1 Parameter setting content

ľ Ł Ã

Press " " button once for any measurement data screen, and enter the setting parameter screen.

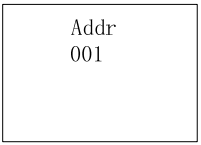	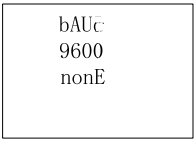	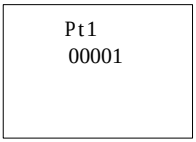
Communication address	β Communication baud rate,check Digit nonE: EvEn: nonE: No, EvEn: Even odd odd: Odd	ı ^ ~ Voltage ratio (primary value of voltage transformer) ㄱ 1~50000 Can set value1~50000

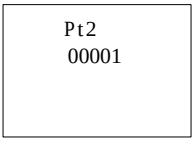	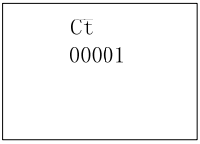	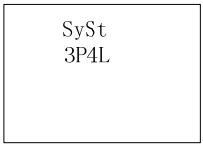

Hד ^ PT1 ч ı

PT2 ч 1˜

3.2.3.2 Example of parameter setting

1˜ Address setting

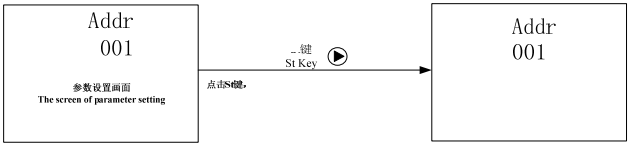

Chapter IV Technical indicators

4.1 Accuracy

Parameter	Accuracy	Measuring range
Current	0.2 0.2 Class	AC0.05A~6A
Phase voltage	0.2 0.2 Class	AC20V~520V
Line voltage	0.5 0.5 Class	AC30V~900V
Frequency	±0.02Hz	45Hz~65Hz
Power	0.5 0.5 Class	

4.4 Digital input

Digital input

ϕ

Optical coupling isolation

Chapter VI Quality Assurance

6.1 Quality Assurance

12 18 ì ä

Ė Â

All new meters sold to customers shall be provided with free quality assurance for the faults caused by design, materials and process within 12 months after power-on or 18 months after receiving the goods. If the products are determined to meet the above quality guarantee conditions, our company shall be responsible for free maintenance.

6.2 The quality of limit

ŕ Й Ь

Problems with the following devices are not covered by free warranty:

Ь ä ä Â

Damage due to incorrect installation, use, and storage.

Ŧ Â

Excessive operating and application conditions beyond the product specifications.

Ė Â

The meter that has been repaired by an organization or person that is not authorized by the company.

Ŧ Â

The meter that exceeds the free warranty period.

Note: The above pictures are for reference only, the products are subject to the actual product.



Guangdong Yada Electronics Co.,Ltd.

Address:Yada industry park, Gaopugang, Heyuan city,

Guangdong Province.

Domestic market: 86-762-3493871 3493872 3493873

International market: 86-762-3496222

Technical support: 86-762-3493926 3493989

Fax: 86-762-3493912 3493830

Zip code: 517000

http: //www.yada.com.cn

E-mail: market@yada.com.cn