NO: 13040502.0270.03







1
1.1 ~ 1 1 11

LCD	8 LCD
	V A kW kvar kVA kWh MWh
	RS485 Modbus-RTU Modbus ,
	3

1.3

YDM403D	3×230/400V 3×400V

2.1



(PPE)

RS485

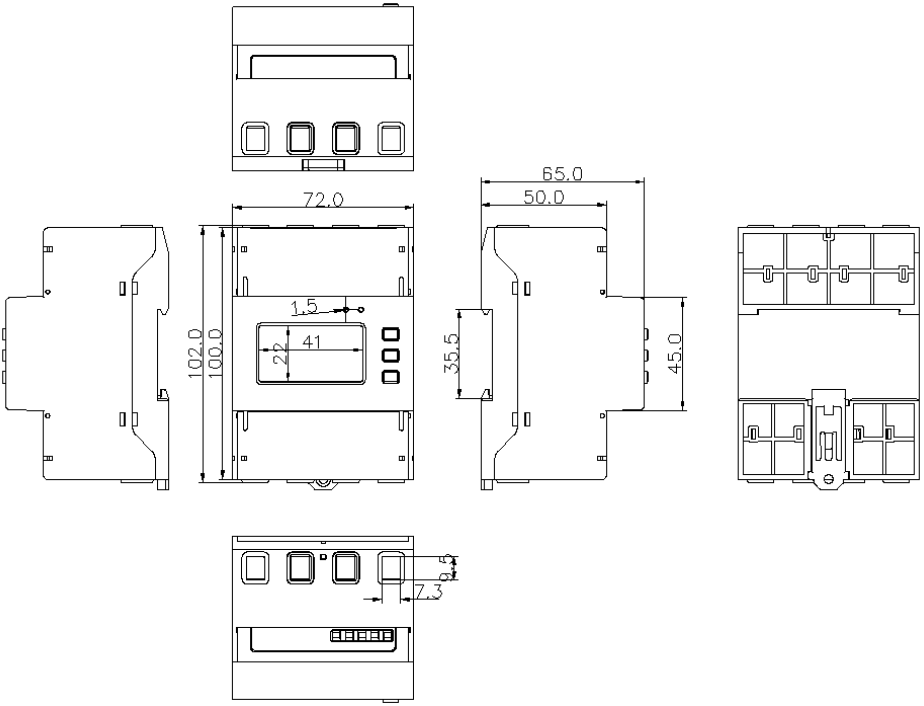
65.0
50.0
72.0
1.5
41
22
102.0
100.0
35.5
45.0
8.5
7.3

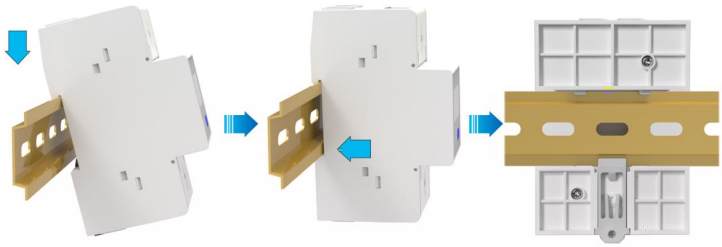

2.2.3

	Ua		4mm²~35mm²	5~14mm	105 600V	
	Ub					
	Uc					
	Un					
	RS485A		0.25mm²~1.5mm²	4~11mm	80 300V	
	RS485B					

1

2

2.4

2.4.1

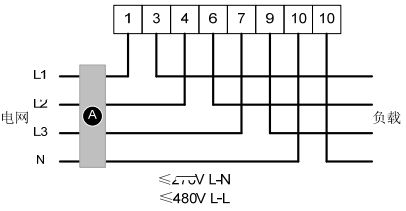

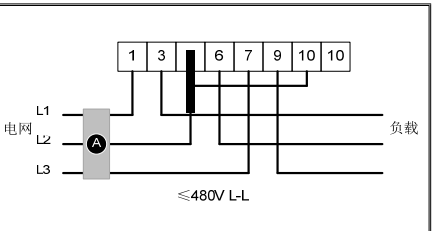

3CT	2CT

●

:

2.4.2

1

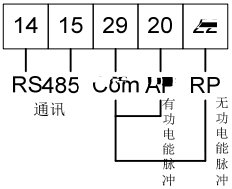

2

RS485 Modbus-RTU 1200bps 2400 bps 4800 bps 9600bps 19200 bps 38400 bps RS485

①

② **RS485** **RS485** **“A”** **“B”**

③ **RS485** **(** **)** **1200**

④ **120**

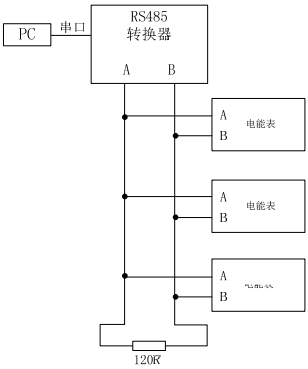
PC
串口
RS485
转换器
A
B
A
B
电能表
A
B
电能表
A
B
120R

3.1

▲		1 2 3
▼		1 2 3
↵		1 2 3

3.2

3.2.1

1 2

2 60

60

3

4 LCD RC 91b9ACEb

5 LCD

Mkvarh MkWAh

Ua Ub Uc -Ia-Ib-Ic

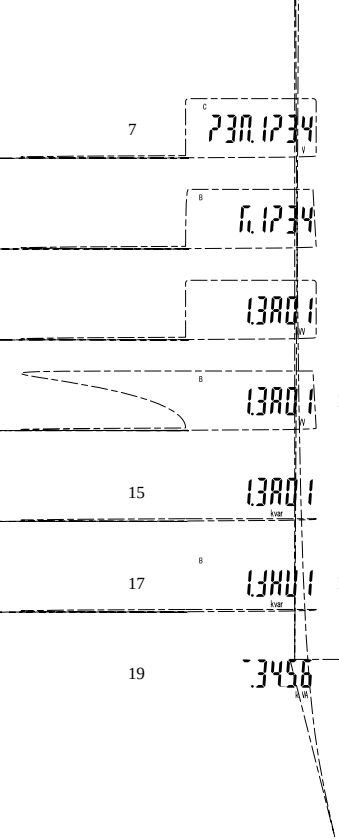

7		B	=1.3801kW	14		C	=1.3801kW
15			=1.3801kvar	16		A	=1.3801kvar
17		B	=1.3801kvar	18		C	=1.3801kvar
19							

		B	=6.1234A	10		C	=6.1234A

2

1		kWh	/	/	/
			0.01	100000.00~999999.99	
			1	1000000~4294967	
2		kWh			/
			0.01	100000.00~999999.99	/
			1	1000000~4294967	/
3		kWh	/	/	/
			0.01	100000.00~999999.99	/
			1	1000000~4294967	/
4		kvarh	/	/	/
			0.01	100000.00~999999.99	/
			1	1000000~4294967	/
5		V	0.0001	/	/
6		A	0.0001	/	/
7		kW	0.0001	/	/
8		kvar	0.0001	/	/
9		kVA	0.0001	/	/
10		/	0.001	-1~0~1	/
11		Hz	0.01	45~65Hz	/

3.2.3

↵ “ MAdr 001 ” ▼

/ LCD ↵ “ Pd 0000 ”

5		3P4L 3P3L	3P4L
6			

4.1

U_n	3 × 230/400	3 × 230/400
I_{min}— I_n(I_{max})	0.25-5(80)A	0.25-5(80)A
constant	400imp/kWh	400imp/kWh
I_{tr}	0.5A	0.5A
f_n	50Hz/60Hz	50Hz/60Hz
	A	B

4.2

	±1.5%	±1.5%	I_{min}≤I I_{tr}
	±1.0%	±1.0%	I_{tr}≤I≤I_{max}
	±1.0%	±1.0%	176V~276V
	±1.5%	±1.5%	I_{min}≤I I_{tr}
	±1.0%	±1.0%	I_{tr}≤I≤I_{max}
	±2%	±2%	/
	±0.02Hz	±0.02Hz	45Hz~65Hz
	±2°	±2°	0.5L~1.0~0.5C
	A 2.0	B 1.0	/
	2	2	/

(1)

1 3

1

1

		3 § ę Ų

			I_{start}		
			A	B	C
230V	1.0	50Hz or 60Hz	$0.05I_{tr}$	$0.04I_{tr}$	$0.04I_{tr}$

(3)

1.15Un t

t

$$\Delta t \geq \frac{240\times10^3}{k \cdot m \cdot U_{test} \cdot I_{start}} [min]$$

k— (imp/kWh), m— U_{test}— (V), I_{start}— (A)

4.3

	RS-485		/ /
	001~247 001		8bits
	1200/4800/9600/19200/38400(9600bps		1bits
	ModBus-RTU		40ms
	ModBus		≤300ms

4.4

4.4.1

	176VAC~276VAC		154VAC~299VAC
			45Hz~65Hz
	≤1.5W 6VA ≤ 0.5VA	/	/

CE	CLASS B -3dB @150kHz~30MHz	-3dB
CS	10V 80%AM(1kHz) 0.15~80MHz	A
SURGE	RS485 4kV 42 Ω 1.2/50us	B
	RS485 4kV 485	B
	4kV	B
EFT	±4kV	A
	U 100% 5s 10 10s;	B
	U 60% 1s 10 10s	B
	U 60% 0.5s 10 10s	B
	U 60% 0.5s 10 10s	B
Harmonic( )	50~2000Hz A	Class A
ESD(	± 8kV ± 15kV	B
	PMS IEC61000-4-8 30A/m 1	A

A

B

4.6

	RS485 6kV – 1.2/50us
	RS485 3.0kV · min · mA

5.1

YADA

6.1

12 18

6.2



86-762-3493871 3493872 3493873

86-762-3496222

86-762-3493926 3493989 (400-830-0868)

86-762-3493912 3493830

517000

http //www.yada.com.cn

E-mail market@yada.com.cn