NO: 13040502.0274.00

DTSY3366D

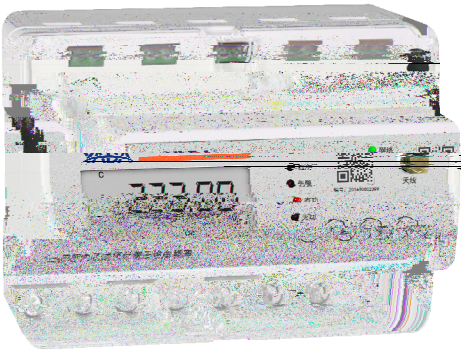



è_ U ɬ

1
1.1 1
1.2 1
5
2.1 5
2.2 5
2.2.1 5
2.2.2 5
2.2.3 SIM 5
2.2.4 6
2.2.5 6
2.3 7
8
3.1 8
3.2 8
3.2.1 8
3.2.2 9
3.2.3 9
3.2.4 10
11
4.1 11
4.2 11
4.3 11
4.4 11
4.5 11
4.6 12
4.7 12
4.8 12
13
5.1 13
14
6.1 14
6.2 14

1.1

DTSY3366D

RS485 2G/4G/NB

GB/T 17215.323—2008 GB/T 17215.321—2008 JJG 596—2012 DL/T 614—2007

DL/T 645-2007

1.2

1-1

1

	0V 0V 0A 0A 60s
	0A 0A 60s
	0A 0A 0V 0V 0A 0A 60s

0V 0V

0A 0A

	1 a 0 1 b 2 a 1 b c
	1 2 3 1 0 999999.99kWh
	1 2 3 0 4
	1 0 2 0 0 0
	14, 8 14 15 14
	23 ≤ ±0.5s/d 5 10 NTP
	10
	10
	10
	10

	60s
	40
	1 ~28 1 2 12
	1 1 2 12
	12
	3
	12 0~23h/0~59min
RS485	1 RS485 DL/T645-2007 RS485 9600bps
	1 2G/4G/NB 3 1 TCP AEP ONENET
	1 2

2.1



2.2

2.2.1

2.2.2

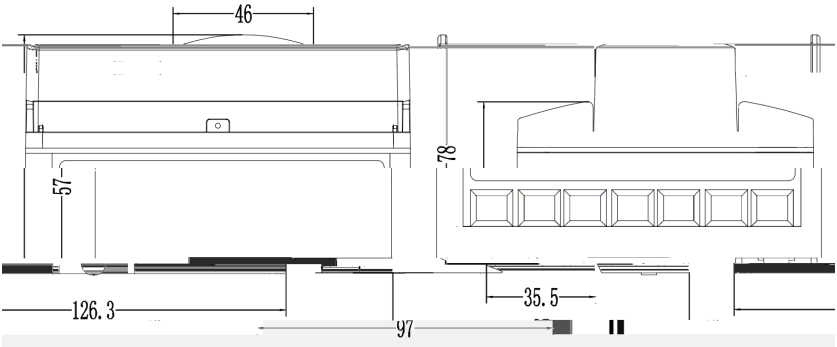

× × 126.3mm×97mm×78mm

0.8kg

2.2.3 SIM

SIM eSIM eSIM SIM I ‘ S

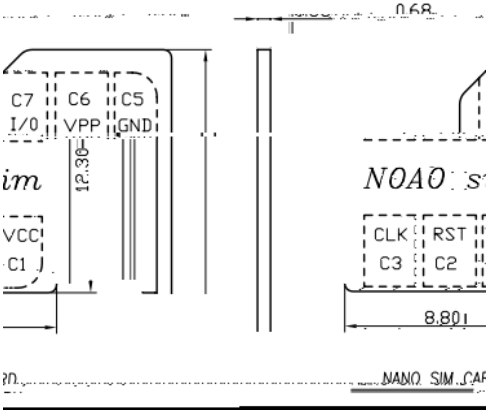
0.68
C7
I/0
C6
VPP
C5
GND
12.30
im
VCC
C1
CLK
C3
RST
C2
8.80
NANO SIM CAR

2.2.4

1 +

RO1 5S RO2 5S

2

2 RO2 RO1

1 +	2

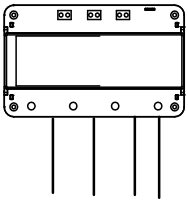

A B C N

3.1

3 ▲ ▼ SET

▲		1 , 5 60 2 3 4 3
▼		1 2 3 4 3
SET		1 2 3 4 2 3 5 “ 3 ” 20kWh

3.2

3.2.1

40

▲ ▼

A B C A B

C A B C A B

C A B C A B C

8 2 kWh, 0 1

0.00~799999.99

LCD 60

1 1

LCD	

LCD	
	5
	1 Ua Ub Uc A B C 2 3 Ia Ib Ic A B C “-”

3.2.2

1 0 1 0

3.2.3

SET modbus

645 6 645 6 CT PT / IP

SET “Pd 0000” Pd 2000 SET

60

0

7



2



4.1

	0.5	0.05Ib~1.2Imax

4.6

5.1

IMEI

/³rÐ > = Ó.ž @ÐÎ)TQˆ= $Àï FJAß#$93ef5ff39 9.995bf14 0d Tf 2809.5<09b28e127f3b6d29d9.5<2d2eb3953 0 TD .2512 Tc (4)Tj E



86-762-3493871 3493872 3493873

86-762-3496222

86-762-3493926 3493989 (400-830-0868)

86-762-3493912 3493830

517000

http //www.yada.com.cn

E-mail market@yada.com.cn